Elevate Wireless

Installation and Operation Manual

Elevate Wireless

Elevate Ethernet switch

English Pages 1 – 21 Original version

1214754 | 261007 | V 2.00 | CEDES AG is certified according to ISO 9001: 2015

Contents

1.	**About this manual**	**2**
1.1	Measurements	2
1.2	CEDES headquarters	2
2.	**Safety information**	**2**
2.1	Intended use	3
2.2	Non-intended use	3
3.	**Symbols, safety messages**	**3**
3.1	Safety messages categories	3
4.	**Introduction**	**4**
4.1	Features	4
5.	**Installation**	**4**
5.1	Mechanical installation of system components in the elevator	4
5.2	Electrical installation	6
6.	**Onboarding**	**9**
6.1	cegard/Smart controller	9
6.2	Step-by-Step onboarding of the LoRaWAN® Gateway and sensors	9
7.	**Troubleshooting**	**13**
7.1	Hardware issues and Gateway LEDs	13
7.2	Gateway Onboarding – “Gateway not found”	13
7.3	Sensor Onboarding – “Sensor not detected”	13
7.4	Sensor and measurement issues	14
7.5	Normal behavior (not a fault)	14
8.	**Maintenance and battery replacement**	**14**
8.1	Maintenance	14
8.2	Battery replacement	14
9.	**Disposal**	**15**
10.	**Product label**	**15**
10.1	Elevate WL-GW1-xxxxx	15
10.2	Elevate WL-TH1-xxxxx | Elevate WL-WIP1-xxxxx	15
10.3	Elevate Ethernet switch kit	15
11.	**Delivery package and ordering Information**	**16**
11.1	LoRaWAN® Gateway	16
11.2	LoRaWAN® sensor (machine room temperature)	16
11.3	LoRaWAN® sensor (water-in-the-pit)	16
11.4	Elevate Ethernet switch kit	16
12.	**Technical data**	**17**
13.	**Dimensions**	**20**
13.1	LoRaWAN® Gateway	20
13.2	Ethernet switch	20
13.3	LoRaWAN® sensors	21

1. About this manual

This installation and operation manual in English, with metric measurements is the **original version**.

The version number is printed at the bottom of each page. To make sure you have the latest version, please visit our product page at www.cedes.com/en/products-for/elevators-escalators/.

1.1 Measurements

Measurements are, if not stated otherwise, given in mm (non-bracketed numbers) and imperial dimensions (numbers in brackets).

1.2 CEDES headquarters

CEDES AG
Science Park
CH-7302 Landquart
Switzerland

2. Safety information

IMPORTANT
READ BEFORE INSTALLATION!

The Elevate Wireless system was developed for the acquisition and transmission of non-safety-related IoT data in elevator environments. The system does not replace a safety-related elevator control system, door monitoring device, emergency stop function or protective device. The planner, installer and operator remain responsible for the safe integration of the complete elevator application.

To ensure safe conditions:

- Read all enclosed instructions and information.
- Follow the instructions given in this manual carefully.
- Observe all warnings included in the documentation and attached to the sensor.
- Do not use the sensor(s), controller or cables if any of these items has been damaged.
- Keep the instruction manual on site.

Elevate Wireless should only be installed by authorized and fully trained personnel! The installer or system integrator is fully responsible for the safe integration of the system. It is the sole responsibility of the planner and/or installer and/or buyer to ensure that this product is used according to all applicable standards, laws, and regulations to ensure safe operation of the whole application.

Any alterations to the device(s) by the buyer, installer or user may result in unsafe operating conditions. CEDES is not responsible for any liability or warranty claim that results from such manipulation.

2.1 Intended use

- Monitoring temperature and humidity in the machine room.
- Detection of conductive liquid in the pit area.
- Data transmission via LoRaWAN® to the gateway.
- Forwarding data via Ethernet in connection with the Elevate system.
- Support of new elevator installations and modernization projects.

2.2 Non-intended use

The Elevate Wireless **must not** be used for:

- Use as a safety-related protective device or as part of an elevator safety chain.
- Use for direct control of elevator movement.
- Use in explosive atmospheres or radioactive environments.
- Use outside the specified environmental conditions.
- Modification of hardware, antennas, housings, printed circuit boards, firmware or approval labels without release.
- Use of SFP modules with the Ethernet switch.

Use only specific and approved safety devices for such applications, otherwise serious injury or death or damage to property may occur!

WARNING

The system provides additional IoT data. It must not be used as the only basis for safety-critical elevator functions.

3. Symbols, safety messages

Symbol	Meaning
▸	Single instruction or measures in no particular order
1. 2. 3.	Sequenced instructions
•	List, in no order of importance
→	Reference to a chapter, illustration or table within this document
Important	Important information for the correct use of the sensor

3.1 Safety messages categories

Warning of serious health risks

WARNING
Serious health risks

Highlights critical information for the safe use of the sensor. Disregarding these warnings can result in serious injury or death.

- ▸ Follow the measures highlighted by the triangle-shaped arrows
- ▸ Consult the safety information in Chapter 2 of this manual

Caution of possible health risk

CAUTION
Possible health risks

Highlights critical information for the safe use of the sensor. Disregarding these warnings can result in injury.

- ▸ Follow the measures highlighted by the triangle-shaped arrows
- ▸ Consult the safety information in Chapter 2 of this manual

Notice of damage risk

NOTICE
Risk of damage

Disregarding these notices can lead to damage to the sensor, the door controller and/or other devices.

- ▸ Follow the measures highlighted by the triangle-shaped arrows

4. Introduction

CEDES Elevate Wireless is a wireless sensor solution designed for use in elevator environments. It enables monitoring specific environmental conditions, such as machine room temperature/humidity, and water presence in the pit, to support condition monitoring and service decision-making within the CEDES Elevate platform.

CEDES has partnered with a leading manufacturer of wireless technology to implement a reliable sensor network based on a LoRaWAN® gateway architecture. The sensors transmit their data wirelessly to the gateway, which is connected via the Elevate Ethernet switch kit to the cegard/Smart controller.

This manual describes the installation, electrical connection, configuration, and operation of the Elevate Wireless system, including the LoRaWAN® gateway and the associated Ethernet switch. For complementary information regarding the cegard/Smart controller, refer to the corresponding Installation and Operation Manual.

4.1 Features

- Integrated into CEDES Elevate Software Platform (IoT) for use in elevator applications
  To provide temperature information,
  - when temperature is too high for working safely in machine rooms.
  - when water is present in the elevator pit and it is not safe for the elevator to operate.
- Reduces potential for elevator submersion into water located in the pit
- Reduces potential heat exposure for technicians servicing elevator equipment in the machine room
- Conforms with cybersecurity requirements in elevator applications

5. Installation

The CEDES Elevate Wireless LoRaWAN® Gateway is delivered pre-configured for operation with the cegard/Smart controller and does not require additional configuration. To integrate the system into operation, follow the procedure described in this manual to onboard the cegard/Smart controller (if not already completed) or to add individual remote wireless sensors (e.g., temperature and humidity sensors or water detection in the pit).

5.1 Mechanical installation of system components in the elevator

PLEASE NOTE | INSTALLATION SEQUENCE

- Before physical installation of the LoRaWAN® Gateway and associated sensors, refer to the information shown in Chapter 6 required for onboarding.
- Install the Elevate Ethernet switch first, connect the Gateway and perform onboarding, then onboard the wireless sensors, and only then mechanically install the Gateway and sensors.

This section describes the recommended installation of the LoRaWAN® system components in typical elevator environments, focusing on mounting locations and environmental conditions.

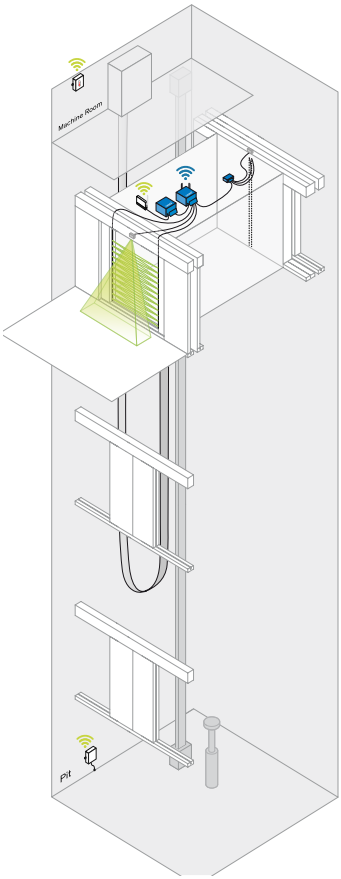

5.1.1 Elevate Ethernet switch kit and cegard/ Smart controller

The Elevate Ethernet switch should be mounted on the car top with the mounting oriented horizontally. Ensure that the mounting location provides a stable and robust installation. For the installation of the cegard/Smart controller types, the instructions provided in the Installation and Operating Manual for the controllers are to be followed.

5.1.2 LoRaWAN® Gateway on the elevator car

- After completing the electrical wiring, screw the protective cover back to the device.
- Install the mounting bracket on the elevator car (car roof) using the provided mounting bracket. To ensure the best possible signal strength between the wireless sensors and the LoRaWAN® Gateway, the LoRaWAN® Gateway should be mounted on the edge of the elevator car and with the clearest possible line of sight into the hoistway. This ensures optimal wireless communication with the LoRaWAN® sensors.
- Insert the bracket mounting screws into the back of the device, then hang the device on the mounting bracket in the elevator car.

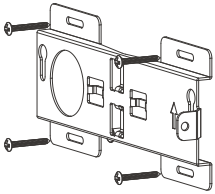

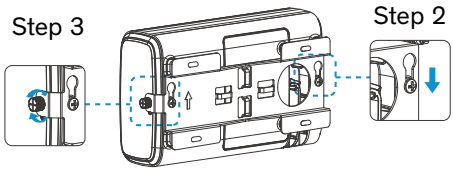

Important considerations:

- Ensure the antenna is properly mounted and aligned vertically.
- Avoid shielding by metallic covers or structures.

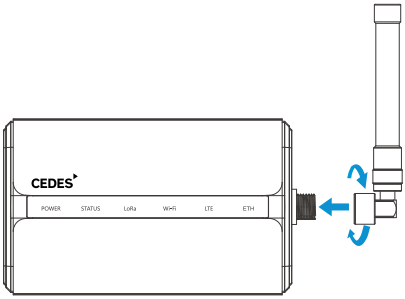

5.1.3 Machine room temperature sensor

- Before mounting the LoRaWAN® wireless sensor, ensure that is turned on (Chapter 5.2.5).
- Install the LoRaWAN® machine room temperature sensor:
  - on a wall inside the machine room.
  - at a height of approximately 1.5 to 2 m above the floor.
- Close the sensor again with the 4 screws.
- Attach sensor to the wall. Cover the mounting screw with the accompanying caps.

Mounting requirements:

- Do not install directly next to heat sources (e.g., motor, drive, control cabinet).
- Avoid installation in direct airflow (e.g., near ventilation openings or fans).
- Ensure sufficient air circulation for representative temperature measurements.
- Fix the sensor using the provided wall mounting kit.
- After installation:
  - Ensure the sensor is switched on.
  - Ensure the enclosure is properly closed.

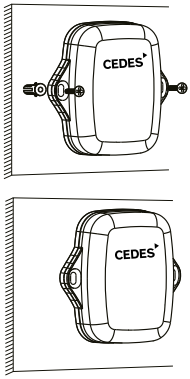

5.1.4 Water-in-the-pit sensor

Install the LoRaWAN® water-in-the-pit sensor according to the following guidelines:

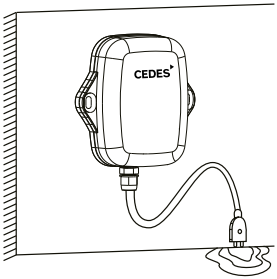

Sensor housing:

- Mount the sensor housing on the hoistway wall above the expected water level.
- Protect it from direct exposure to water and mechanical damage.

Detection probe:

- Positioning the detection probe at the lowest point of the elevator pit.
- Ensure direct contact with potential water accumulation.
- Secure the probe using screws or adhesive tape (3M tape as provided).
- The installation must ensure reliable detection even for small amounts of water.

5.1.5 General notes on wireless coverage

The LoRaWAN® system is designed for typical elevator installations.
However, the following aspects must be considered:

- Metallic structures can attenuate the radio signal.
- Install the gateway in a position with good visibility to all sensors.
- Perform a functional test after final installation.

5.2 Electrical installation

5.2.1 Ethernet switch / power supply

- Connect the AC power cable to the power supply unit (AC/L, AC/N, FG).

WARNING

- Risk of electrical shock and energy hazard. All failure should be examined by a qualified technician. Please do not remove the case of the power supply by yourself!
- Risk of electric arcs and electric shock (danger to life). Connecting both the primary and the secondary sides together is not allowed.
- The ground (FG) must be connected to earth ground.
- Use copper connectors and stranded wire only.

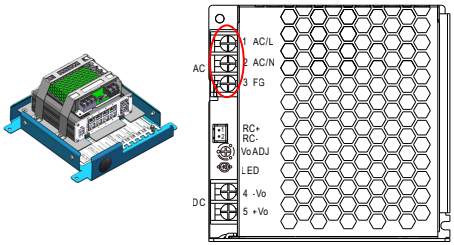

NOTICE

- The SFP ports of the Ethernet switch are not intended for use.
- **Do not install or connect SFP modules to the SFP ports.**

© CEDES | V 2.00

5.2.2 cegard/Smart controller (CGSM-B and -C)

- Connect the Ethernet cable (blue) to the cegard/Smart controller (RJ45 “J8”) and to the Ethernet switch (PoE Out1).

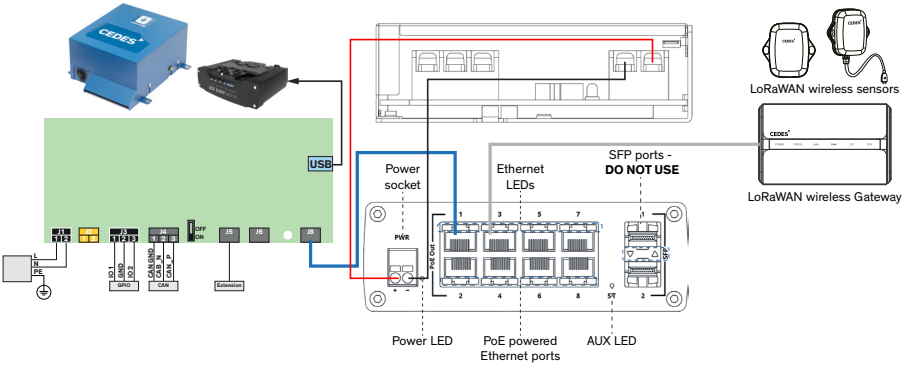

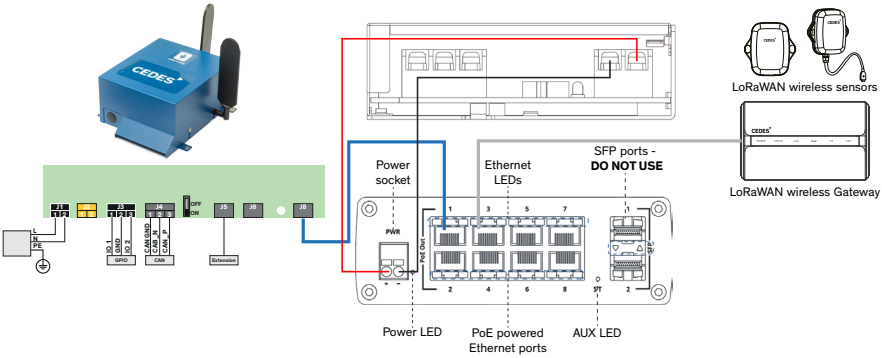

- Follow the instructions in the Installation and Operation Manual for cegard/Smart controller.

5.2.3 cegard/Smart controller (CGSM-E)

- Connect the Ethernet cable (blue) to the cegard/Smart controller (RJ45 “J8”) and to the Ethernet switch (PoE Out1).
- Connect the Ethernet cable (green) to the EComgard cabin switch (Port 3) and to the Ethernet switch (PoE Out2).

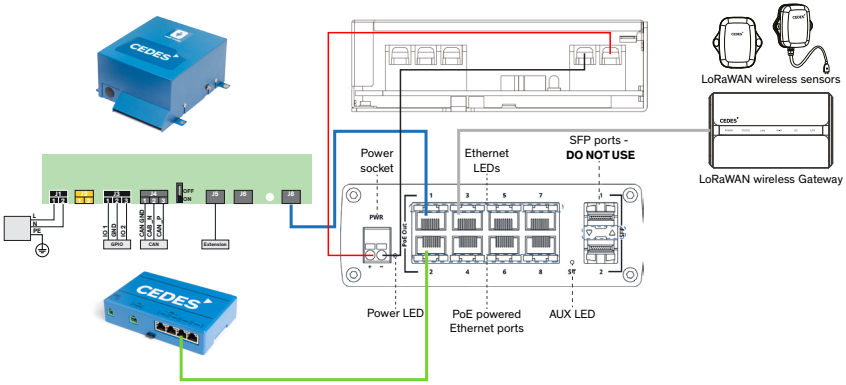

- Follow the instructions in the Installation and Operation Manual for the cegard/Smart controller.

5.2.4 LoRaWAN® Gateway

- Remove back cover and then connect the Ethernet cable (gray) to the RJ45 receptacle inside the gateway housing. Route the cable through the waterproof silicone using the grooves near the base of the Gateway.

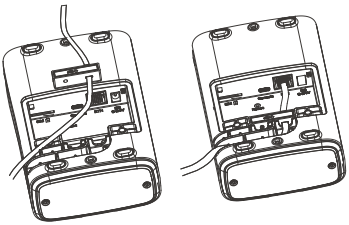

- Connect the other end of the Ethernet cable (gray) to the Ethernet switch (PoE Out3).

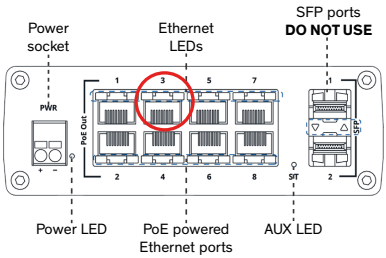

- After completing the installation and electrical connection of the LoRaWAN® Gateway, verify correct device operation by checking the LED indicators on the LoRaWAN® Gateway.

  The following LEDs shall be inspected:
  - POWER: Indicates that the gateway is supplied with power → LED must be ON
  - STATUS: Indicates system operation status → LED must be ON
  - LoRa: Indicates LoRaWAN® communication → LED should be ON
  - ETH: Indicates Ethernet connection and activity → LED must be ON

If one or more LEDs are not active:
- Check the power supply and PoE connection
- Check the Ethernet connection to the switch
- Verify correct installation and wiring

Note:
The system must not be commissioned unless all LEDs indicate proper operation.

© CEDES | V 2.00

5.2.5 LoRaWAN® sensors

- Open the sensor by unscrewing the 4 screws on the back.
- Activate the sensor (press and hold the button inside the sensor for more than 3 s).

Function	Action	LED
Turn ON	▸ Press and hold the button for more than 3 s.	OFF → ON
Turn OFF	▸ Press and hold the button for more than 3 s.	ON → OFF
Check ON / OFF status	▸ Press the power button promptly.	Light ON: Device is ON. Light OFF: Device is OFF.

6. Onboarding

6.1 cegard/Smart controller

To begin the onboarding process, scan the QR Code below (https://elevate-m.cedes-connect.com/) and then follow the steps shown in Chapter 6.2. During onboarding you will be prompted for the MAC ID number 2D code (which is unique to each cegard/Smart device). This 2D code can be found on the controller itself, as well as on the controller packaging.

NOTICE

The QR code left directs the user to the login screen via the default web browser. The user must have an assigned username and password to access onboarding of the cegard/Smart and LoRaWAN® Gateway and associated sensors.

PLEASE NOTE | INSTALLATION SEQUENCE

- Install the Elevate Ethernet switch first, connect the Gateway and perform onboarding, then onboard the wireless sensors, and only then mechanically install the Gateway and sensors.

6.2 Step-by-Step onboarding of the LoRaWAN® Gateway and sensors

NOTICE

The QR code used for onboarding the Gateway is inside under the cover. The QR code used for onboarding the remote wireless sensors are inside the back cover.

Step 1 "Existing IoT applications"
Select elevator that needs wireless sensor, in sensors tab and click on "Add wireless sensors" button:

Step 1 "New IoT applications"
During onboarding specify which additional sensors you want to add to this device.

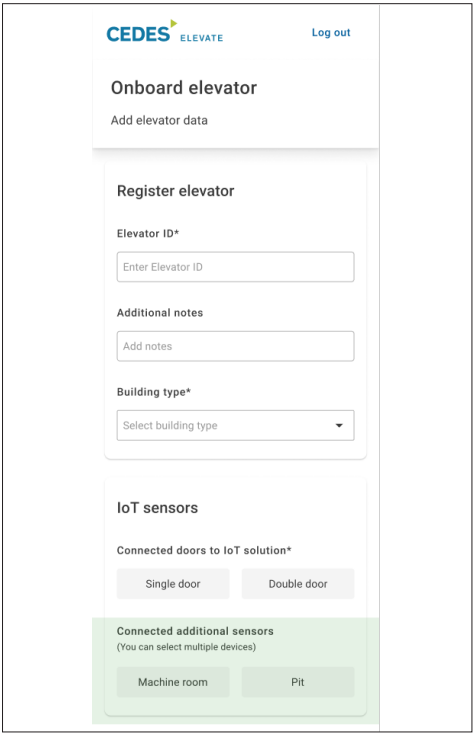

Step 2
Scan QR code from the LoRaWAN® Gateway.

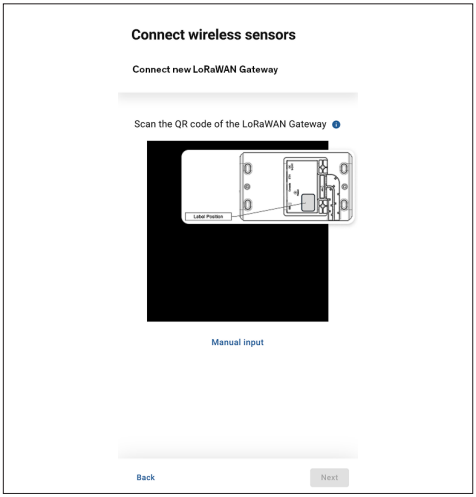

Step 3
Connect all devices together on top of the car and apply power. Refer to the diagrams shown in Chapter 5.2.2 and Chapter 5.2.3 for the cegard/Smart controller associated with the application.

1. Connect the PoE Ethernet port on the LoRaWAN® Wireless Gateway to Port 3 on the Ethernet switch using an Ethernet cable.
2. Connect the Port J8 on the cegard/Smart controller to Port 1 on the Ethernet switch using an Ethernet cable.
3. If the cegard/Smart controller is a CGSM-E variant, connect Port 1 on the EComgard switch to Port 2 on the Ethernet switch using an Ethernet cable (Chapter 5.2.3).
4. Power on both devices.
5. Verify that the Ethernet indicator lights are on.

© CEDES | V 2.00

Step 4
Connect sensors one by one - select the sensor you wish to start with.

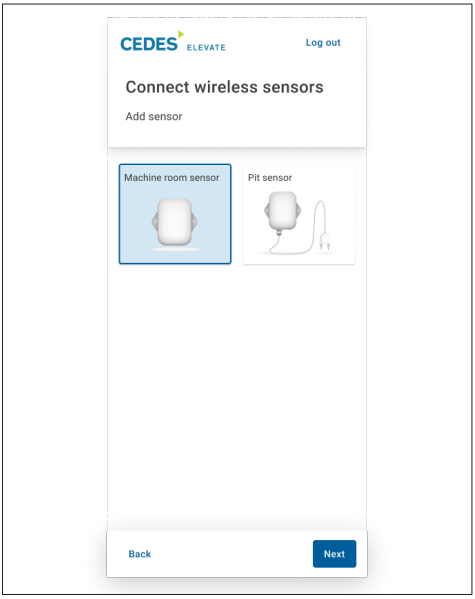

Step 5
Scan the QR located inside the back cover of the sensor (sensor needs to be opened).

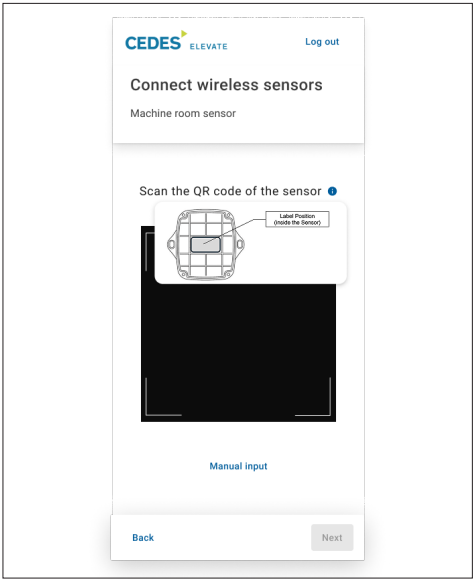

Step 6:
Power-up the sensor:

1. Press and hold the power button for 3 ... 5 s – until LED turns ON.
2. Release power button.

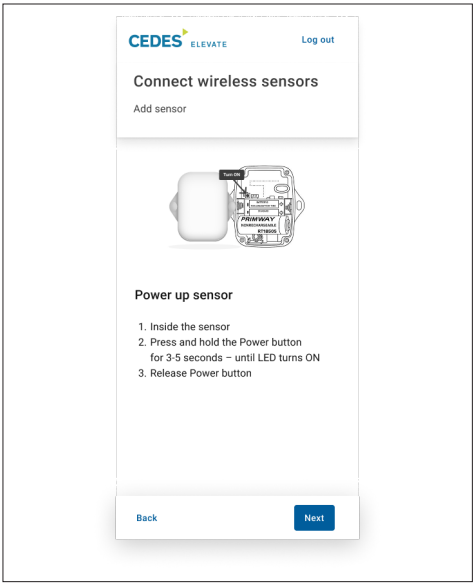

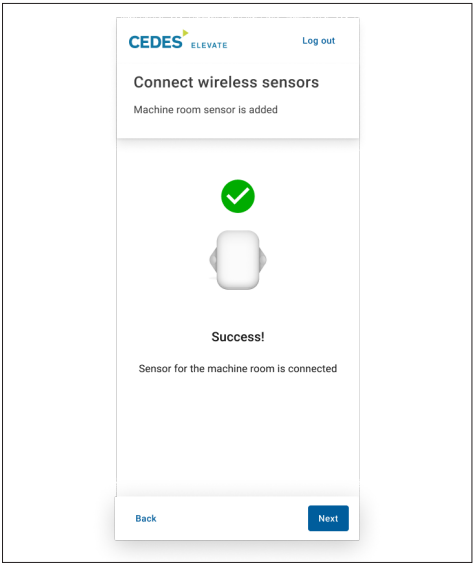

- For the second sensor repeat steps 4 to 6.

© CEDES | V 2.00

7. Troubleshooting

7.1 Hardware issues and Gateway LEDs

Problem	Possible cause	Check	Action
Gateway not reachable	No network connection	▸ Check cabling and switch	▸ Restart system
Sensor cannot be switched on	Batteries empty, inserted incorrectly or wrong battery type	▸ Check battery type and polarity	▸ Install 2 × ER18505 Li-$SOCl_2$ correctly; switch sensor on
Gateway POWER LED OFF	No power / no PoE	▸ Check switch, PoE port, power supply	▸ Restore power, correct wiring
Gateway ETH LED OFF	No Ethernet connection	▸ Check cable and port	▸ Reconnect or replace cable

7.2 Gateway Onboarding – “Gateway not found”

Problem	Possible cause	Action	Note
Gateway not found	Ethernet switch not connected	▸ Verify wiring according to wiring diagram	▸ Use correct ports
Gateway not found	Switch has no power	▸ Switch on / check power supply	▸ Switch Power LED must be permanently ON
Gateway not found	Switch malfunction	▸ Restart or replace switch	▸ Replace if issue persists
Gateway not found	Incorrect Ethernet/PoE wiring	▸ Correct wiring	▸ Follow wiring diagram
Gateway not found	Gateway not connected	▸ Check cable connections	▸ Ensure correct port
Gateway not found	Gateway not powered	▸ Check swicht and supply	▸ Gateway POWER LED must be ON
Gateway not found	Gateway faulty	▸ Replace gateway	▸ Critical issue
Gateway not found	Network / infrastructure issue	▸ Restart system	▸ Check installation
Gateway not found	Incorrect gateway data entered	▸ Re-enter data	▸ Use QR code
Gateway not found	Wrong FSP / installation	▸ Select correct system	▸ Verify using QR code
Onboarding fails repeatedly	Multiple system issues	▸ Verify full installation	▸ Restart complete system
Hardware incompatible	Wrong frequency (EU/US)	▸ Replace hardware	▸ Usually detected

7.3 Sensor Onboarding – “Sensor not detected”

Problem	Possible cause	Check	Action
Sensor not detected	Sensor switched off	▸ Switch on sensor	▸ Check LED
Sensor not found	Incorrect sensor data	▸ Re-enter data	▸ Use QR code only
Sensor not detected	Battery empty / wrong	▸ Insert correct batteries	▸ 2 × ER18505 Li-$SOCl_2$
Sensor not detected	Sensor defective	▸ Replace sensor	▸ After retries
Sensor not detected	Sensor not active	▸ Restart onboarding	▸ Normal behavior
Sensor not detected	Poor radio signal	▸ Optimize position	▸ Avoid metal
Hardware incompatible	Wrong frequency (EU/US)	▸ Replace hardware	▸ Usually detected

7.4 Sensor and measurement issues

Problem	Possible cause	Check	Action
Sensor cannot be switched on	Battery missing / wrong	▸ Check battery type and polarity	▸ Insert correct batteries
Sensor sends no data	Sensor OFF / no connection	▸ Check sensor status and placement	▸ Switch on / adjust position
Temperature implausible	Bad mounting position	▸ Check installation location	▸ Mount at 1.5 ... 2 m height
Water sensor does not detect	Probe positioned incorrectly	▸ Check probe location	▸ Place at lowest point
Water sensor always detects water	Probe wet or shorted	▸ Inspect probe and cable	▸ Clean or replace probe

7.5 Normal behavior (not a fault)

Observation	Explanation	Action
Delayed sensor connection	Wireless retry mechanism	▸ Wait

Contact our technical support if:

- Gateway cannot be found despite correct wiring.
- Gateway replacement does not resolve issue.
- Sensor does not join after multiple attempts.
- System repeatedly shows errors or timeouts.
- Behavior is unclear or not described above.

8. Maintenance and battery replacement

8.1 Maintenance

The Elevate Wireless system does not require regular adjustment. A periodic visual and functional inspection is recommended, especially after work on the elevator system, after component replacement or after changes to the installation environment.

- Check mounting and mechanical fixation.
- Check cable routing and connectors.
- Check gateway LED states.
- Check sensor values in the system for plausibility.
- Check the position and fixation of the water-in-the-pit probe.
- Check housings for damage or water ingress.

8.2 Battery replacement

When the batteries have run out of power, remove the back cover to replace the old batteries.

- Install 2 batteries. Otherwise, it will cause inaccurate power calculations.
- Sensors must be powered using ER18505 Li-SoCl$_2$ batteries. Alkaline batteries are not allowed.

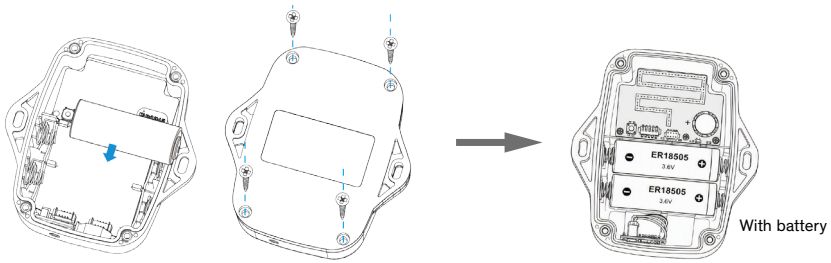

9. Disposal

Disposal should be made using the most up-to-date recycling technology according to local regulations and laws. Batteries must be collected separately and disposed of according to local legal requirements.

Waste Electrical and Electronic Equipment (WEEE):
At the end of life, this equipment should be collected separately from any unsorted municipal waste.

10. Product label

10.1 Elevate WL-GW1-xxxxx

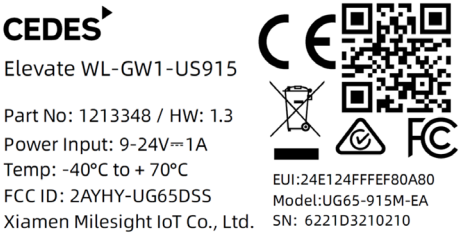

10.2 Elevate WL-TH1-xxxxx | Elevate WL-WIP1-xxxxx

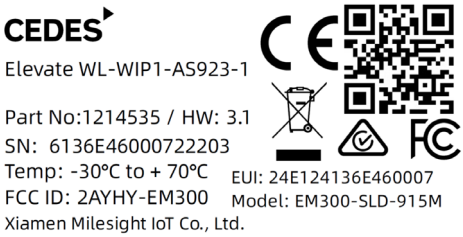

10.3 Elevate Ethernet switch kit

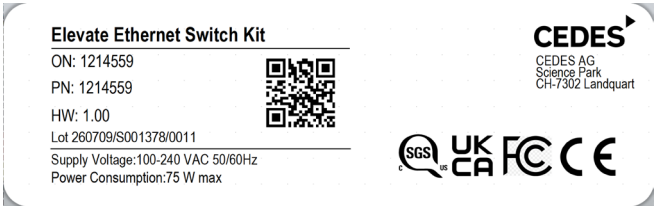

ON 1xx xxx	Part number used for ordering
PN 1yy yyy f	Internal CEDES component part number
Elevate Ethernet switch kit	Part name
Lot number	Manufacturing date (yymmdd), manufacturing job number (mmmmmmm), and incremented serialization (cccc)
HW: a.bc	Increasing digits with the following meaning: **a._ _:** Major changes, e.g. additional functionality **_.b_:** Changed configuration (e.g. timing), error correction, bug fix, new compilation, no additional functionality **_._c:** 'Cosmetic' update, no functional influence

11. Delivery package and ordering Information

Elevate Wireless kits

The Elevate WL kits shown below include the Elevate LoRaWAN® Gateway, Elevate Ethernet switch kit with power supply, three (3) Ethernet cables, Elevate Wireless temperature / humidity sensor and Elevate water-in-the-pit sensor.

11.1 LoRaWAN® Gateway

Gateway

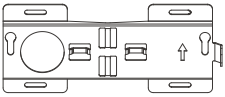

Mounting bracket

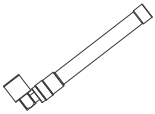

LoRaWAN antenna

Bracket fixing screws

11.2 LoRaWAN® sensor (machine room temperature)

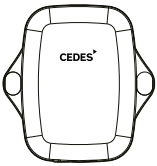

Sensor

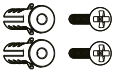

Wall mounting kits

Screw caps

11.3 LoRaWAN® sensor (water-in-the-pit)

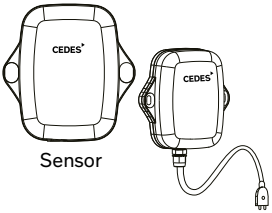

Sensor

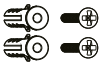

Wall mounting kits

Screw caps

Mounting screws

3M tape

11.4 Elevate Ethernet switch kit

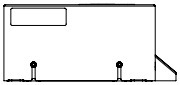

Elevate Ethernet switch kit

Ethernet cable (blue)

Ethernet cable (gray)

Ethernet cable (green)

Ordering information for North American kits (915 MHz):

Part No.	Model designation	Description
1214435	Elevate WL-**Kit**-US915	North American variant (915 MHz)
	Elevate Wireless Components	
1213344	Elevate WL-TH1-US915	Temperature / humidity sensor
1213346	Elevate WL-WIP1-US915	Water-in-the-pit sensor
1213348	Elevate WL-GW1-US915	Gateway
1214559	Elevate Ethernet Switch Kit	

Ordering information for European kits (868 MHz):

Part No.	Model designation	Description
1214437	Elevate WL-**Kit**-EU868	European variant (868 MHz)
	Elevate Wireless Components	
1213345	Elevate WL-TH1-EU868	Temperature / humidity sensor
1213347	Elevate WL-WIP1-EU868	Water-in-the-pit sensor
1213349	Elevate WL-GW1-EU868	Gateway
1214559	Elevate Ethernet Switch Kit	

NOTICE

Additional Elevate Wireless kits and components that utilize other frequencies are also possible based on volume and market needs. Please contact a local CEDES representative to discuss potential expansion of the Elevate Wireless product offering.

12. Technical data

LoRaWAN® Gateway	
Antenna	1 × 50 Ω N-female external connector
Channel	8 (half- / full-duplex)
Frequency bands - Initial release - Future	 EU868 / US915 AU915 / KR920 / AS923-1&2&3&4 / CN470 / IN865 / RU864
Sensitivity - Gateway - Temp. / Humidity sensor - Water-in-pit sensor	 -140 dBm Sensitivity at 292 bps -147 dBm at 300 bps -137 dBm at 300 bps
Transmitting power - Gateway - Sensor(s)	 Max. 27 dBm 16 dBm (868 MHz) / 20 dBm (915 MHz) / 19 dBm (470 MHz)
Gateway protocol	V1.0 Class A / Class B / Class C and V1.0.2 Class A / Class B / Class C

LoRaWAN® Gateway ethernet interface	
Port	1 × RJ45 WAN Port (PoE PD supported)
Physical layer	10 / 100 / 1,000 Base-T (IEEE 802.3)
Data rate	10 / 100 / 1,000 Mbps (auto-sensing)
Interface	Auto MDI / MDIX
Mode	Full- or half-duplex (auto-sensing)
Ethernet isolation	1.5 kV RMS

LoRaWAN® components - electrical	
Input / output voltage	
- Gateway	IEEE 802.3af PoE (power over Ethernet)
- Sensor(s)	2 × 4000 mAh ER18505 Li-SOCL$_2$ Battery
Power consumption	
- Gateway	Typical 2.9 W, max. 4.2 W
- Sensor(s)	Typical Battery Life: 8 years or more

LoRaWAN® components - mechanical	
Dimensions (w × h × l)	
- Gateway	180 × 110 ×55.5 mm (7.09 × 4.33 × 2.19 in)
- Temperature / humidity	88.5 × 85.3 × 27 mm (3.48 × 3.36 × 1.06 in)
- Water-in-pit	105.6 × 85.3 × 27 mm (4.16 × 3.36 × 1.06 in)
Housing material	
- Gateway	PC + ABS (UL94 V0)
- Sensor(s)	ABS + PC (flame retardant)
Housing color	
- Gateway	White + Black
- Sensor(s)	White
Weight - Gateway	548 g
Enclosure rating	Gateway IP65 | Sensor IP67
Temperature range	
- Operation Gateway	-40°C to +70°C (-40°F to +158°F)
- Operation Sensor(s)	-30°C to +70°C (-22°F to +158°F)
- Storage Gateway	-40°C to +85°C (-40°F to +185°F)
Relative Humidity	
- Gateway	0% to 95% (non-condensing) at 25°C / 77°F
- Sensor(s)	0% to 100% (non-condensing)

LoRaWAN® sensor characteristics (temperature / humidity / water in pit)	
Temperature	
- Range	-30°C ... +70°C
- Accuracy	0°C ... +70°C (±0.3°C), -30°C ... 0°C (±0.6°C)
- Resolution	0.1°C
Humidity	
- Range	0% ... 100% RH
- Accuracy	10% ... 90% RH (±3%), below 10% and above 90% RH (±5%)
- Resolution	0.5% RH
Water-in-pit sensor	
Liquid type	Conducting liquid
Trigger condition	When liquid level reaches 5 mm
Cable length (probe)	1.5 m
LED indicator	1 × LED indicator (internal)
Button	1 × power / reset button (internal)
Mounting	
- Receiver	Wall screw, 3M tape, or cable-tie mounting
- Water-in-pit sensor probe	Wall screw or 3M tape mounting

© CEDES | V 2.00

LoRaWAN® general components compliance	
Gateway	CE, FCC, IC, Telec, JATE, RCM
Sensor	CE, FCC, ISED, RCM, Telec, ICASA
RoHS	Yes
REACH	Yes

ETHERNET SWITCH KIT	
ETH	Multi-layer managed 8 x ETH ports, 10/100/1000 Mbps
IEEE 802.3 series standards	802.3i, 802.3u, 802.3ab, 802.3x, 802.3az, 802.3z, 802.3ad
PoE standards	IEEE 802.3af (PoE, Type 1) and IEEE 802.3at (PoE+, Type 2), Alternative A (Batch 15 and all batches from Batch 17 onward)IEEE 802.3af (PoE, Type 1) and IEEE 802.3 at (PoE+, Type 2), Alternative B (Batches 1–14 and Batch 16)
PoE Power per Port	Max. 30 W (at PSE)
Total PoE Power Budget	75 W (at PSE)
Max. Ethernet cable length	100 m
PoE protection	Short-circuit and overload protection

ELECTRICAL	
Input / output voltage	
- Elevate Ethernet switch kit	100 ... 240 VAC, 47 ... 63 Hz input voltage, 48 VDC output voltage rated to 1.6 A
- Ethernetswitch	7 ... 57 VDC input voltage, 44 ... 57 VDC PoE-Out input voltage range
Power consumption	
Ethernet switch Idle	< 3 W / Max: 8 W

MECHANICAL ETHERNET SWITCH KIT	
Dimensions (w × h × l)	250 × 191 × 110 mm
Housing material	Metal
Housing color	Blue
Weight	3.2 kg
Enclosure rating	IP23
Operating temperature	-30°C to +65°C
Humidity	20% to 90% (non-condensing)

COMPLIANCE ETHERNET SWITCH KIT	
General Ethernet switch	CE, UKCA, RCM, ANRT, FCC, IC, CB, NBTC, PROFINET, CITC, RoHS, REACH, WEEE, SDPPI (POSTEL), JATE, Kenya, ICASA, Giteki`, UL Safety, MTCTE
General power supply	CE, cURus, cULus, CCC, ICC, PFC, SEMI F47, CB, DEKRA, EAC, UKCA, RCM
RoHS	Yes
REACH	Yes

13. Dimensions

13.1 LoRaWAN® Gateway

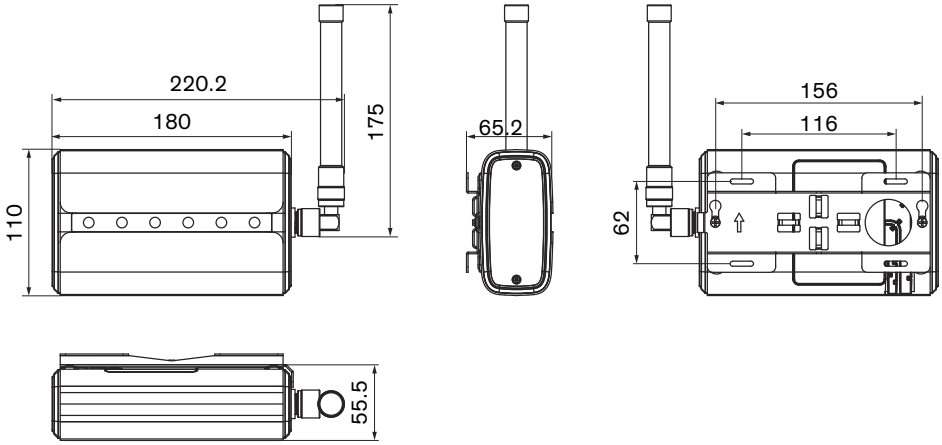

13.2 Ethernet switch

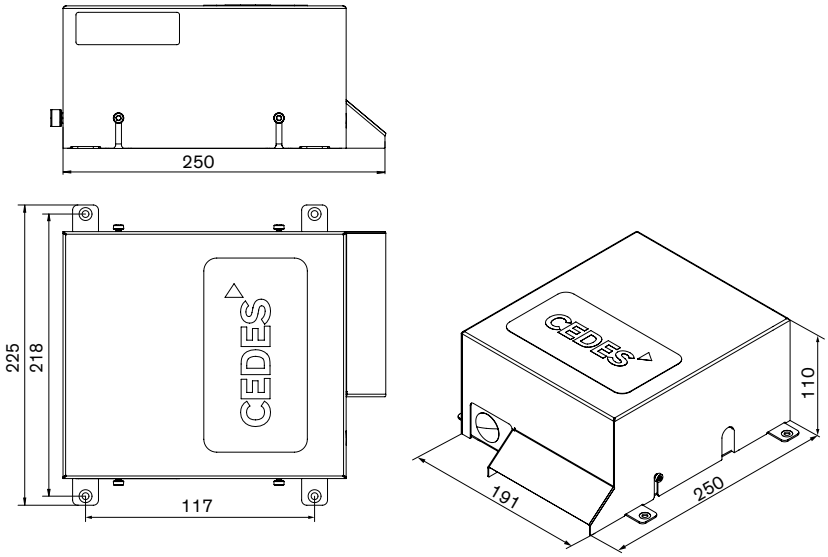

© CEDES | V 2.00

13.3 LoRaWAN® sensors

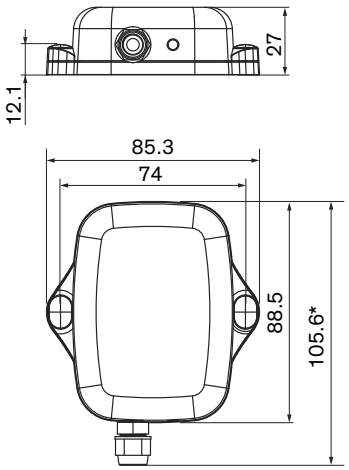

Sensor

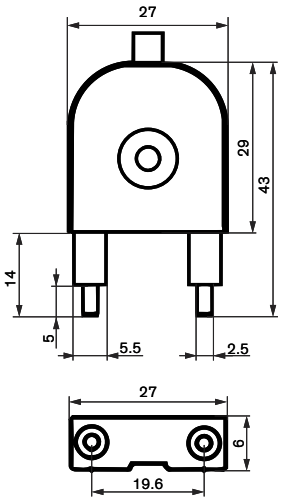

Sensor probe

CEDES AG, Science Park | CH-7302 Landquart
Phone: +41 81 307 2323 | info@cedes.com | www.cedes.com